LITTORA 200 ICW8

Product sheet

Compact and high-performance, this 2-way speaker driver is perfect for covering any space exposed to environmental constraints. Its design, originally intended for a marine application, lends it a faultless longevity and robustness while meeting Focal's internationally renowned standards. In yachting, humid spaces or outdoors, Littora 200 ICW8 delivers a generous bass, and is the perfect compromise for intensive use and discreet integration.



Improved seal
Pre-assembled EVA joint at the rear of the speaker driver for silicone-free fitting.

Wide-dispersion tweeter
The Aluminium 'M'-shaped dome tweeter.

Fast, reliable mounting
Thanks to the multi-point mounting system, vibrations are no longer a problem and fall risks are eliminated.

Versatile sound signature
The speaker driver benefits from two optimised crossovers for indoor and outdoor installation.

Sealed connection
A DT06-2S sealed connector provides a reliable, fast and secure connection. Disassembly is just as easy.

Key points

- Excellent power handling
- Developed in France
- Certified IP65 waterproofing
- Ready-to-paint white aluminium grille for limitless customisation
- Shallow mounting depth

Technical specifications

Type of speaker	LITTORA 200 ICW8
Diameter	8″
Recommended amp power	25 – 150W
Nominal impedance	8Ω
Minimal impedance	4.2Ω at 150Hz
Sensitivity (2.83V/1m)	90dB
Frequency response	48Hz – 28kHz
High-pass, slope	70Hz, 24dB/Oct - 70Hz, 24dB/Oct
Closed box volume 1, F -3dB	10L, 72Hz
Closed box volume 2, F -3dB	8L, 76Hz
Free air, F -3dB	70Hz
Tweeter	'M'-shaped aluminium dome
IP certification	IP65 (ASTMB117)
Crossover setting	Indoor/Outoor switch
Grille	Ready-to-paint aluminium
UV resistance	Yes (ASTMG53)
Operating temperatures	-25°C to 90°C
Number of mounting points	4
Connector	DT06-2S sealed
Mounting depth	$4^{1/2}$″ (113mm)
Certifications	ROHS, ROHS 2, CHINA ROHS, REACH
Weight	3.5kg
Recommended settings for DSP-amplifiers:	
Recommended Limiter Threshold	12,1V RMS
Recommended Limiter Attack Time	0ms
Recommended Limiter Release Time	150ms
Recommanded High-pass filter	50Hz Linkwitz-Riley 12 dB/octave

Size (mm)

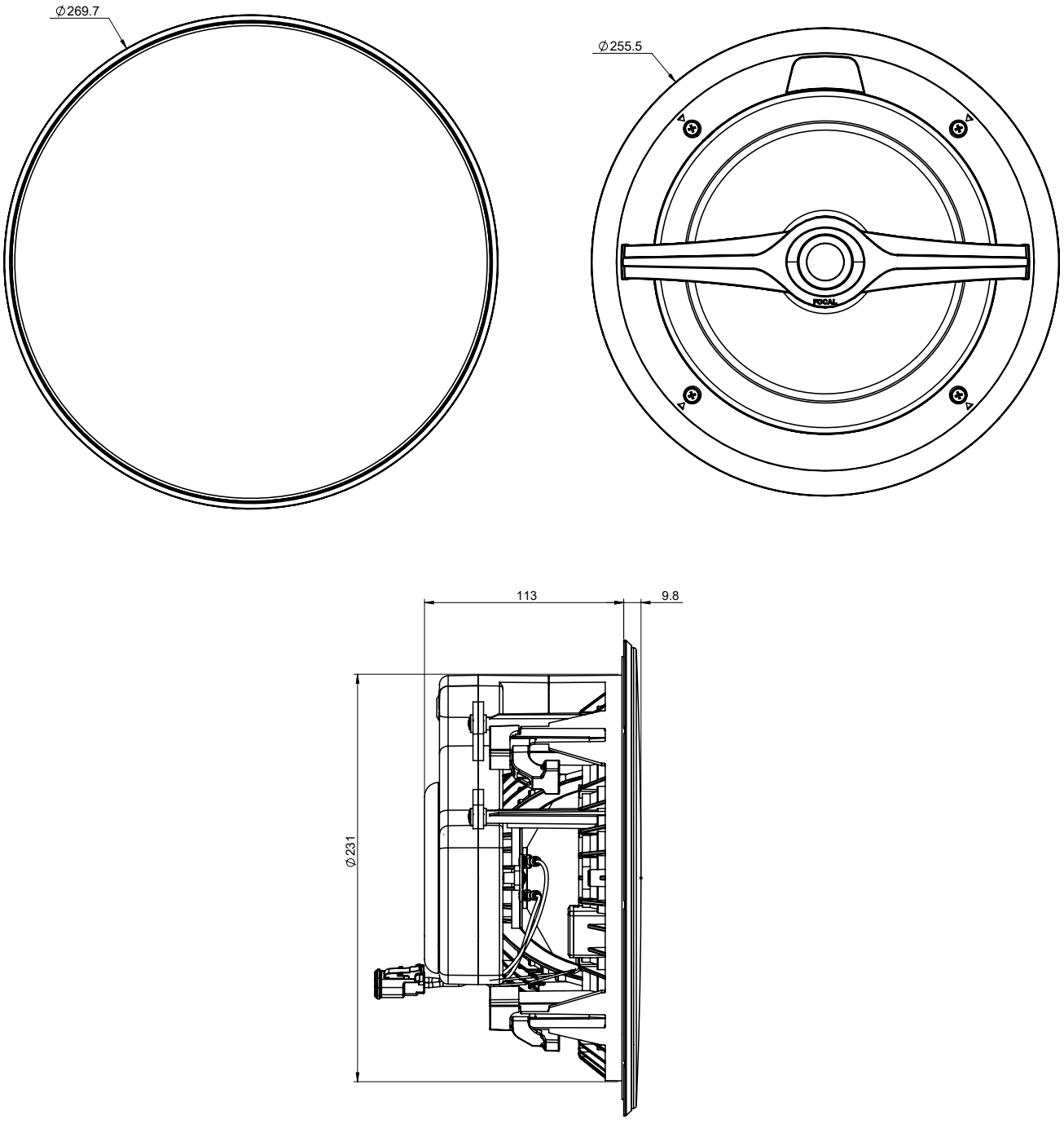

Measurements Directivity

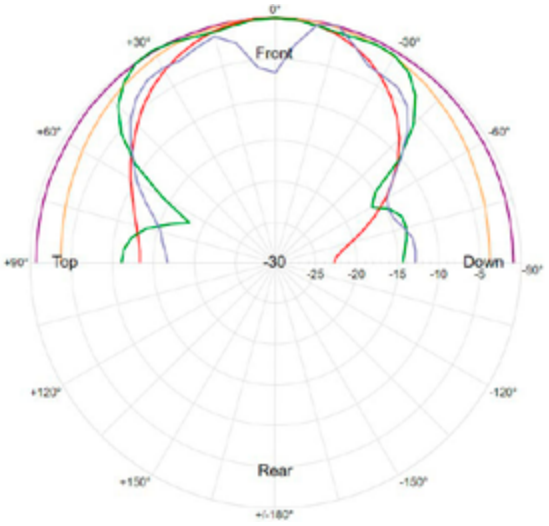

Curve	Freq
	500.00
	1.00K
	2.00K
	4.00K
	8.00K

Frequency Response

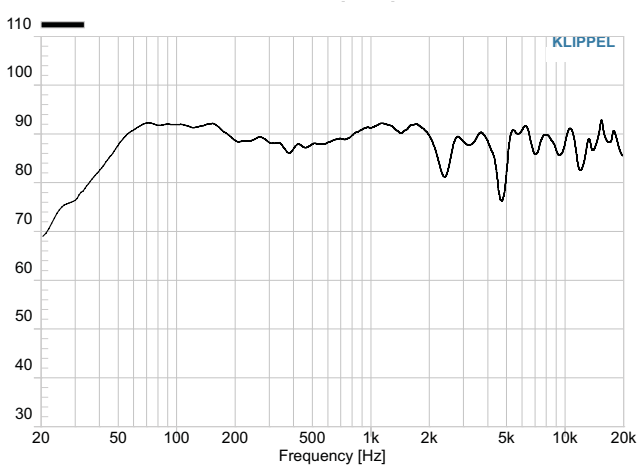

Littora 200 ICW8 Speaker level Calculation Table

Littora 200 ICW8	Nominal sensitivity		90dB
Power/Distance	1m	2m	5m
1W (2.83V)	90dB	84dB	76dB
20W (12.6V)	103dB	97dB	89dB
50W (20V)	107dB	101dB	93dB
100W (28.3V)	110dB	104dB	96dB

Summary	125Hz	250Hz	500Hz	1kHz	2kHz	4kHz	8kHz
NPA (2.83V/1m)(dB)	91	90	90	90	89	90	91
Aperture angle at -6dB	180°	180°	180°	180°	120°	60°	100°