LITTORA 1000 ICW8

Product sheet

As a flagship product from the Focal yachting offering, the Littora 1000 ICW8 speaker driver is simply the best in its category and impeccable across the board. It boasts the latest Focal technologies to deliver a powerful and captivating sound, while preserving a sound signature inspired by Focal's floorstanding loudspeakers. Like a dive watch, it has been rigorously developed to perfectly suit being used in extreme conditions, such as yachting or for outdoor or indoor use at home. This speaker driver is characterised by excellence and versatility.



Adjustable treble level
Three settings for the tweeter (-3/0/+3dB) to best suit each environment.

Beryllium tweeter
This tweeter boasts the inverted dome from the Utopia loudspeakers, and delivers unrivalled treble precision.

Improved seal
Pre-assembled EVA joint at the rear of the speaker driver for silicone-free fitting and a perfect seal.

Fast and reliable mounting
Thanks to the multi-point mounting system, vibrations are no longer a problem and fall risks are eliminated.

Versatile sound signature
The speaker driver benefits from two optimised crossovers for indoor and outdoor installation. The tweeter also has 3 level settings.

Sealed connection
A DT06-2S sealed connector provides a reliable, fast and secure connection. Disassembly is just as easy.

Key points

- Excellent power handling
- Made in France
- Certified IP65 waterproofing
- Ready-to-paint white aluminium grille for limitless customisation
- Shallow mounting depth

Technical specifications

Type of speaker	LITTORA 1000 ICW8
Diameter	8″
Recommended amp power	50 – 180W
Nominal impedance	8Ω
Minimal impedance	4.3Ω at 150Hz
Sensitivity (2.83V/1m)	91dB
Frequency response	45Hz – 40kHz
High-pass, slope	70Hz, 24dB/Oct - 70Hz, 24dB/Oct
Closed box volume 1, F -3dB	10L, 72Hz
Closed box volume 2, F -3dB	8L, 74Hz
Free air, F -3dB	66Hz
Tweeter	Beryllium
IP certification	IP65 (ASTMB117)
Tweeter setting	-3/0/+3dB
Crossover setting	Indoor/Outoor switch
Grille	Ready-to-paint aluminium
UV resistance	Yes (ASTMG53)
Operating temperatures	-25°C to 90°C
Number of mounting points	4
Connector	DT06-2S sealed
Mounting depth	$4^{1/2}$″ (112.7mm)
Certifications	ROHS, ROHS 2, CHINA ROHS, REACH
Weight	3.6kg
Recommended settings for DSP-amplifiers:	
Recommended Limiter Threshold	12,1V RMS
Recommended Limiter Attack Time	0ms
Recommended Limiter Release Time	150ms
Recommanded High-pass filter	45Hz Linkwitz-Riley 12 dB/octave

Size (mm)

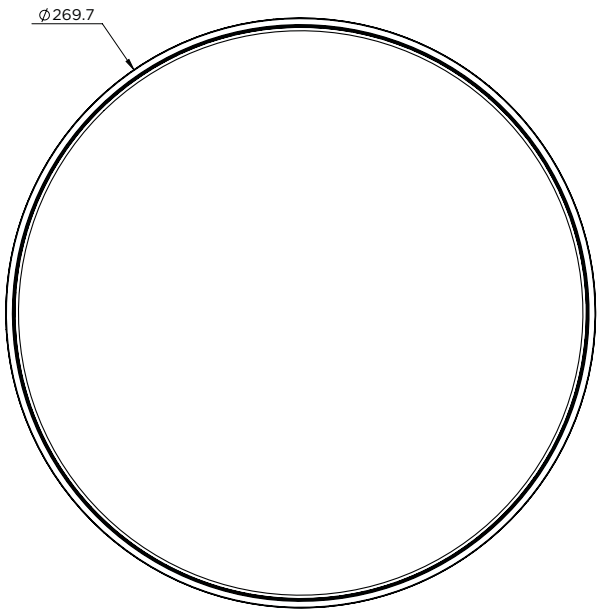

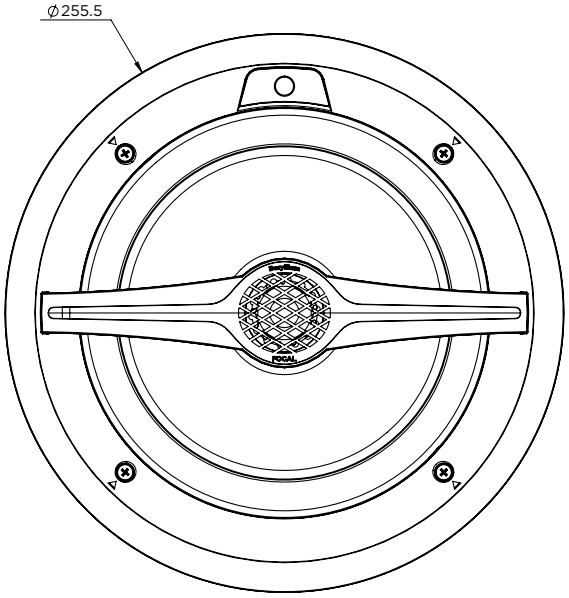

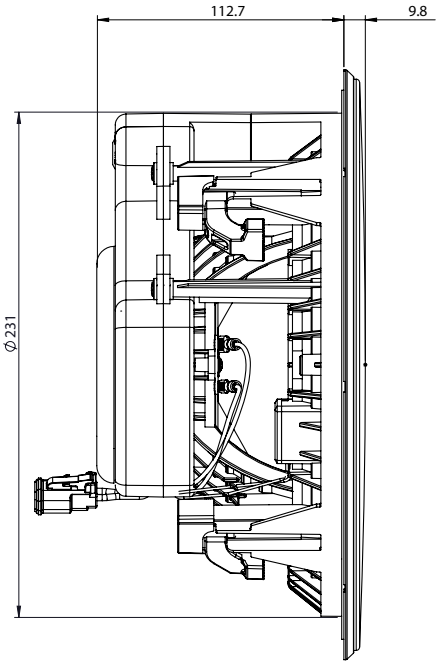

Measurements Directivity

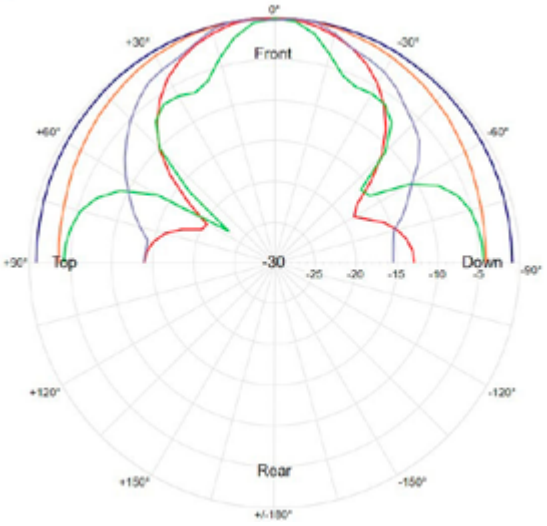

Curve	Freq
	500.00
	1.00K
	2.00K
	4.00K
	8.00K

Frequency Response

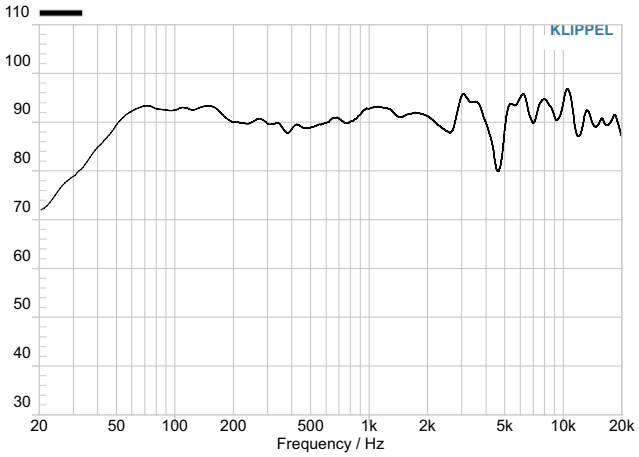

Littora 1000 ICW8 Speaker level Calculation Table

Littora 1000 ICW8	Nominal sensitivity		91dB
Power (8Ω)/Distance	1m	2m	5m
1W (2.83V)	91dB	85dB	77dB
20W (12.6V)	104dB	98dB	90dB
50W (20V)	108dB	102dB	94dB
100W (28.3V)	111dB	105dB	97dB

Summary	125Hz	250Hz	500Hz	1kHz	2kHz	4kHz	8kHz
NPA (2.83V/1m)(dB)	91	90	90	90	89	90	91
Aperture angle at -6dB	180°	180°	180°	180°	120°	60°	100°